SOLENOID
D-Frame

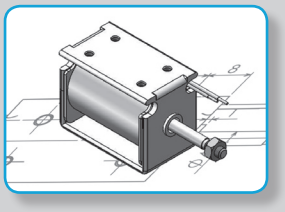

Item No.						
3	2		3		4	2
1	2	3	4	5	6	7

Voltage:

6 VDC	2
12 VDC	3
24 VDC	4
48 VDC	5

Application:

pull	2
pull + spring	3
push	4
push + spring	5

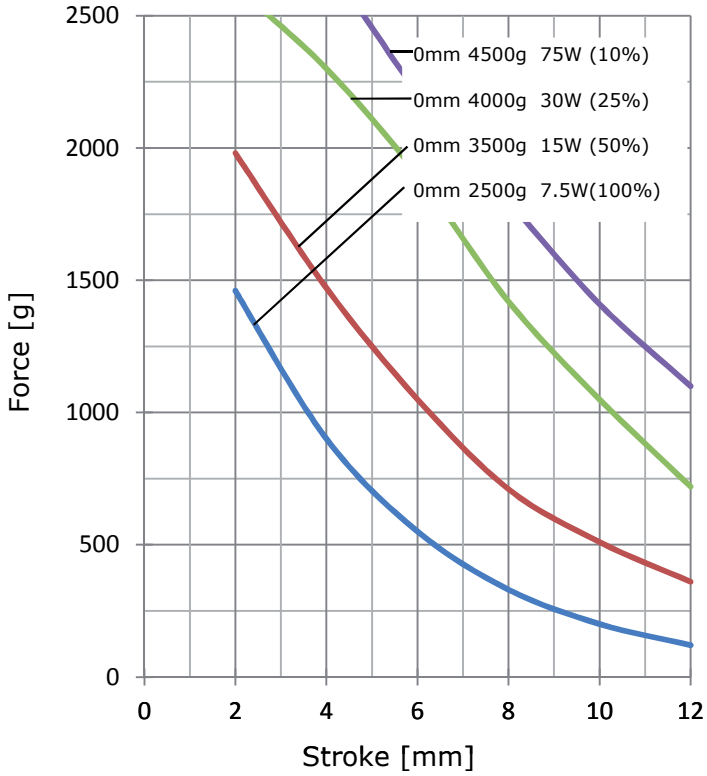

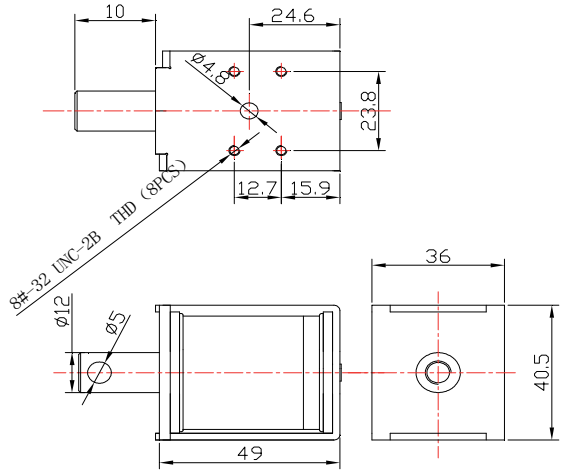

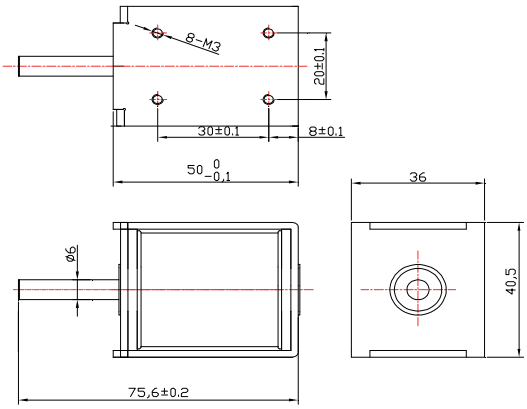

Data					
	ED = ON [sec] / (ON [sec] + OFF [sec]) x 100%	100%	50%	25%	10%
		continous	intermitted		
	max. ON time [sec]	∞	140	50	9
	at 20°C [W]	7,5	15	30	75
	at 20°C [mA]	1200	1700	2400	3800
	Resistance [Ω]	Voltage [VDC]			
	4,8	6	8,5	12	19
	19,2	12	17	24	38
	76,8	24	34	48	76
	307,2	48	68	96	152

TLM | 11 avenue de la Gare - 77890 Beaumont en Gatinais - France | www.tlm-composants.fr
Tel: +33 (0)1 64 29 37 78 | Fax: +33 (0)1 64 29 43 60 | Email: contact@tlm-composants.fr